NOMENCLATURE
TECHNICAL REGULATIONS 2015

January 20th, 2015

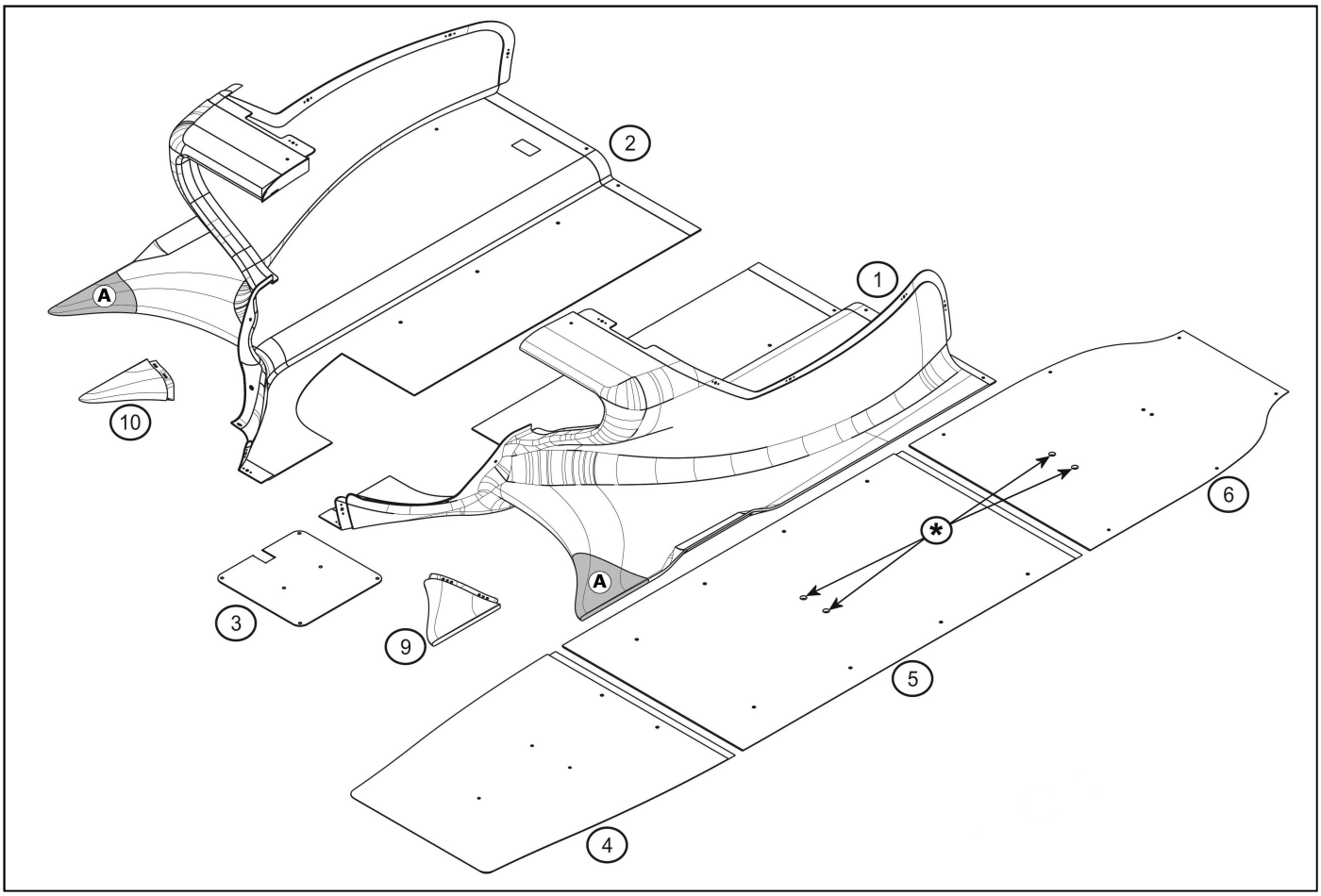

	A	B	C
1		X	
2		X	
3	X		
4		X	
5		X	
6		X	
9		X	
10		X	

1B - 2B : LH and RH Floors

It is allowed to repair with no change in weight and dimension except the aeras covered by the front floor extensions (Aera A).
It is allowed to repair the aeras A following the method described in the 2015 User Manual (Chapter B)
It ‘s mandatory to modify the floors following the method described in the 2015 User Manual (Chapter B).
It is allowed to add a protective and sealing gasket between the floors and the chassis.
It is allowed to drill floors for the front ballast fitting.

3B: ECU door

It is mandatory to modify the ECU door following the method described in Manuel of User 2015 (Chapter E).
It is allowed to put tape on the opening made for the transponder.

4B : Front wood

It is permitted to apply adhesive tape on the leading edges. In all cases, its only function shall be to protect the item to which it has been applied. Under no circumstances shall it be used to connect several items.
It can be painted.

NOMENCLATURE
TECHNICAL REGULATIONS 2015

April 3rd, 2015

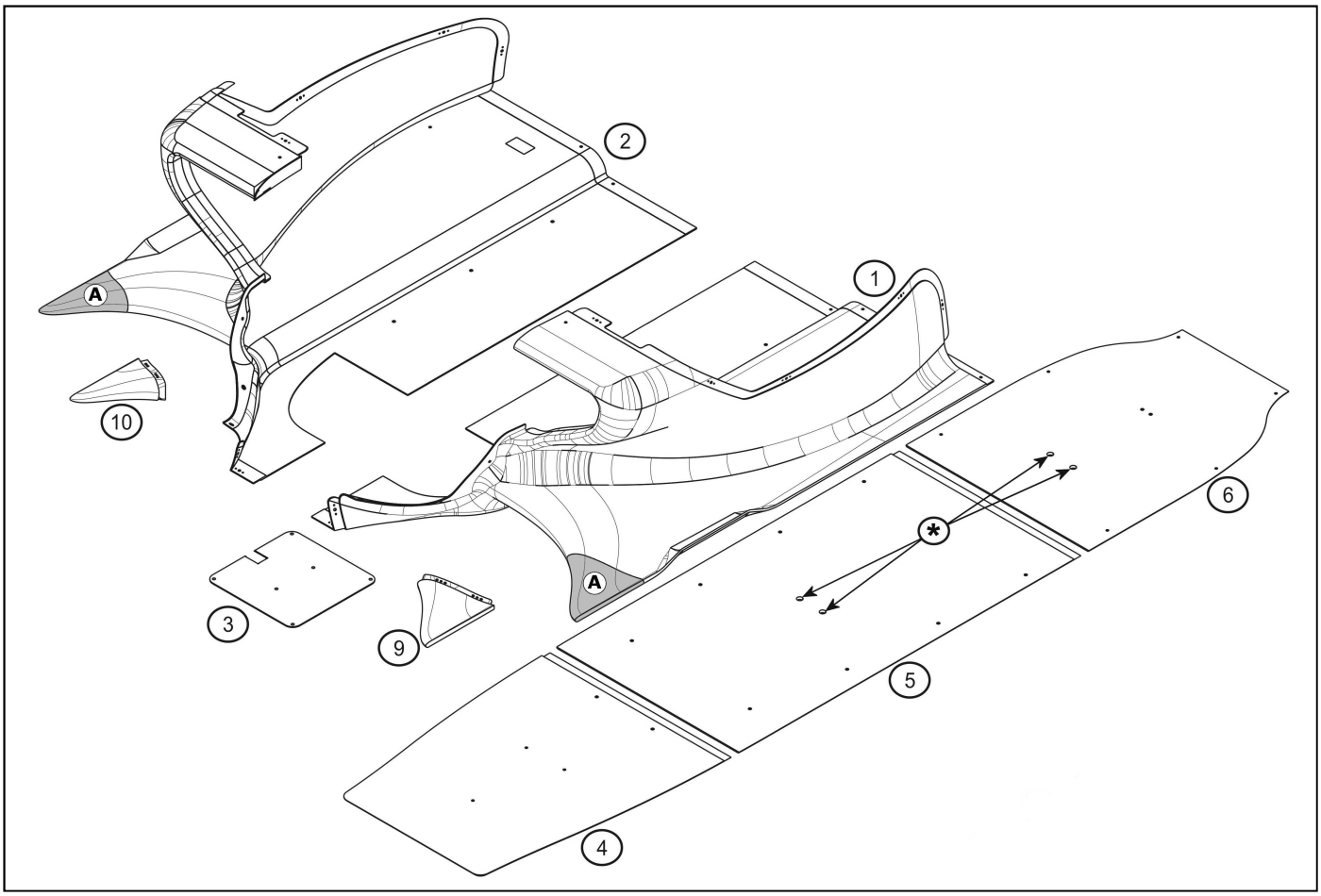

	A	B	C
1		X	
2		X	
3	X		
4		X	
5		X	
6		X	
9		X	
10		X	

5B - 6B : Middle and rear woods

They can be painted.
Their minimum thickness is 3 mm.
The thickness measurment will be made around the 4 holes located close to the longitudinal axle of the woods (marked with a *).
It is allowed to drill the middle wood (mark 5) for the front ballast fitting.

9B - 10B : LH and RH Front floors extensions

Front floor extension repairs are allowed.
They can be replaced following the method described in the 2015 User Manual (Chapter B).